PIP Strips™

P-6001

Support: echelon@echelon-inc.com

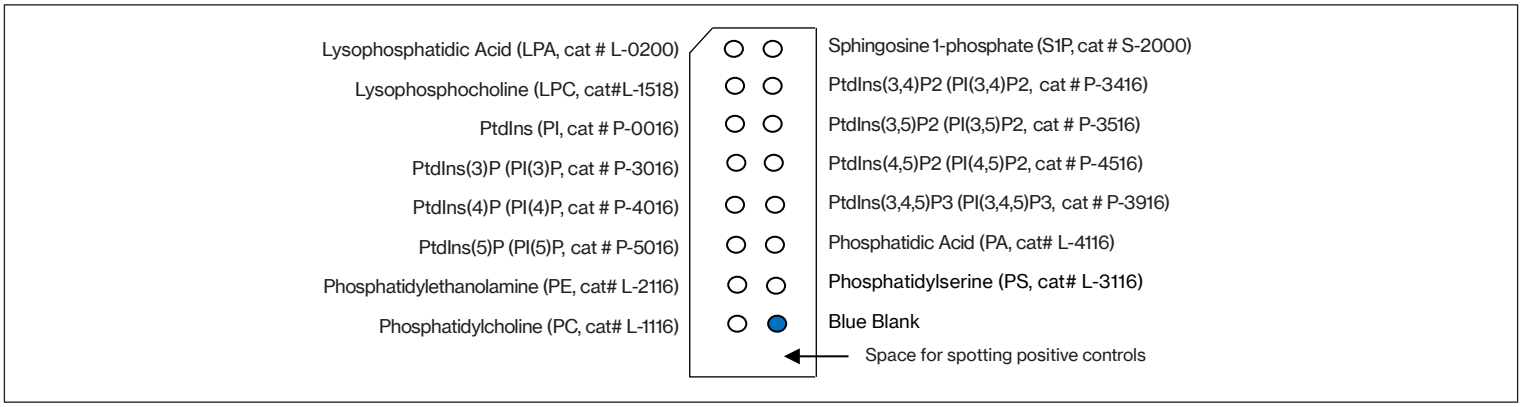

Description: PIP Strips™ are 2 cm x 6 cm hydrophobic membranes that have been spotted with 15 different lipids at 100 pmol per spot. These membranes can be used to determine lipid-protein interactions, through a simple protein-lipid overlay experiment. This gives researchers a convenient way to determine whether their protein of interest interacts with one or more of the bound lipids.

Storage: Store at 2-8 °C. Product is moisture and light sensitive.

Format: The membrane has a diagonal cut at the top left corner, and Xylene Cyanol FF* (blue) is spotted in the bottom right blank spot to help orient the strip. Ponceau S stain (pink) was added to the lipid spots. Space at the bottom of each PIP Strip is provided for customers to spot additional control proteins or antibodies. All lipids are long chain (≥ C16), highly pure natural or synthetic analogs. For more information on the lipids spotted on the membrane, visit our website and search the catalog numbers provided in the figure.
*Xylene Cyanol FF fluoresces at around 615 nm and may be visible with fluorescence-based imaging, such as Licor.

Suggested Use: Please visit our website at www.echelon-inc.com for a general protocol, "Protocol Strip Array," which applies to product numbers P-6001, P-6100, P-6002, P-6003, P-6005, P-6111, S-6000, and S-6001. We also recommend reviewing our "Frequently Asked Questions (FAQ)" document for additional information.

References:

1. Dowler S, Currie RA, Downes PC, Alessi DR. DAPP1: a dual adaptor for phosphotyrosine and 3-phosphoinositides. Biochemical Society J. 342, 7-12 (1999)
2. Dowler, S., Kular, G., and Alessi, R.D., Protein lipid overlay assay, Sci STKE, 2002. April 23; 2002 (129). p16.
3. Ferguson CG, James RD, Bigman CS, Shepard DA, Abdiche Y, Katsamba PS, Myszka DG, Prestwich GD. Phosphoinositi-de-containing polymerized liposomes: stable membrane-mimetic vesicles for protein-lipid binding analysis. Bioconjug Chem. 2005 Nov – Dec; 16(6): 1475-83.
4. Busse RA, ScaciocA, Hernandez JM, Krick R, Stephan M, Janshoff A, Thumm M, Kuhnel K. Qualitative and quantitative characterization of protein-phosphoinositide interactions with liposome-based methods. Autophagy. 2013 May 1;9(5):770-7

Hazardous Properties and Cautions: The toxicological and pharmacological properties of this compound are not fully known. For further information see the MSDS on request. This product is manufactured and shipped only in small quantities, intended for research and development in a laboratory utilizing prudent procedures for handling chemicals of unknown toxicity, under the supervision of persons technically qualified to evaluate potential risks and authorized to enforce appropriate health and safety measures. As with all research chemicals, precautions should be taken to avoid unnecessary exposures or risks.

Warranty and Disclaimer: Echelon warrants the product conforms to the specifications stated herein. In the event of nonconformity, Echelon will replace products or refund purchase price, at its sole option, and Echelon shall not be responsible for any other loss or damage, whether known or foreseeable to Echelon. No other warranties apply, express or implied, including but not limited to warranty of fitness for any purpose or implied warranty of merchantability. Purchaser is solely responsible for all consequences of its use of the product and Echelon assumes no responsibility therefore, including success of purchaser's research and development, or health or safety of any uses of the product.